Quotation Needed By: _____

Date: _____ Contact: _____

Company Name: _____

Address: _____

City: _____ State: _____ Zip: _____

Phone: _____ Fax: _____

E-mail: _____

ELT Inc.
Engineered Lifting Technologies

PHONE: 855.800.9568 • FAX: 716.667.6837
EMAIL: webinfo@eltlift.com
WWW.ELTLIFT.COM

CUSTOM TELESCOPING PALLET LIFTER

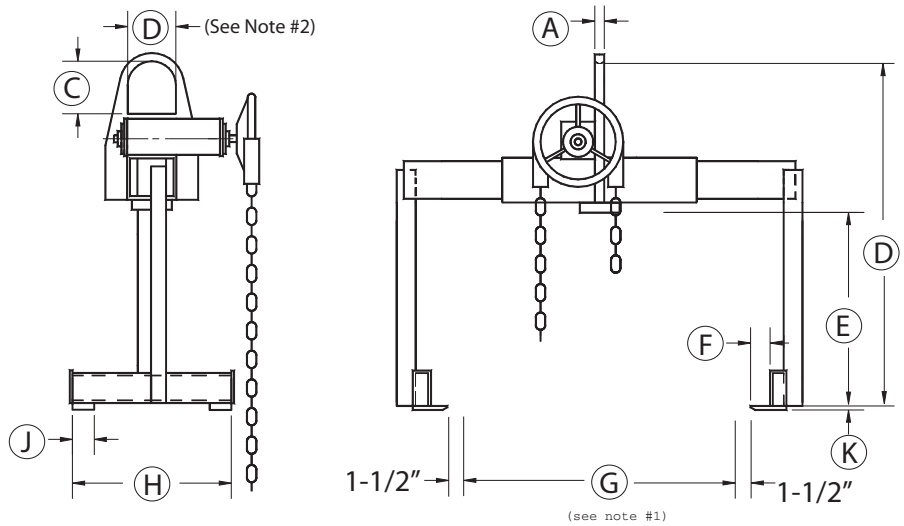

Model TPL

TELESCOPING PALLET LIFTER

Legs telescope to accommodate various size pallets and to save aisle space.

❑ **MODEL TPL**

CAPACITY _____ LBS.

* A	_____	LIFT LOOP THICKNESS
* B	_____	BAIL WIDTH
* C	_____	BAIL HEIGHT
* D	_____	HEADROOM
E	_____	VERTICAL CLEARANCE
* F	_____	FOOT LENGTH
G	_____	MIN/MAX LOAD WIDTH
H	_____	MIN/MAX PALLET WIDTH
* J	_____	FOOT WIDTH
K	_____	FOOT THICKNESS

*** OPTIONAL DATA**

Notes:
1. All loads must be centered under the lifting bail.
2. Please verify that the lifting bail will suit the crane hook.
3. Options and accessories are available upon request.

Additional Information:
(Load dimensions & properties)

_____

web form

PLEASE NOTE: WEIGHT AND DIMENSIONS CAN VARY AND ARE APPROXIMATE AND REFERENCE ONLY.
SPECIFIC WEIGHT CAN NOT BE DETERMINED UNTIL THE UNIT IS FABRICATED.